Team 04
CHOP STOP

Team

Maddie Collins Mailhot

Daniel Dick

Daniel Wharton

Kyle

Contents

Introduction

Project Breakdown
- Prototype Development
- Circuit System
- Final Mechanical Design

Conclusion
- Business Analysis
- Design Norms
- Future Work

Project Description

Problem: High number of annual shop accidents

Key Design Considerations

- Size of Design
- Force Calculations
- Electrical Components
- Safety
- Test Bed Development

Prototype Development – Test Bed

Belt Driven System
Multiple Tests Allowed
Protected by PC Shield

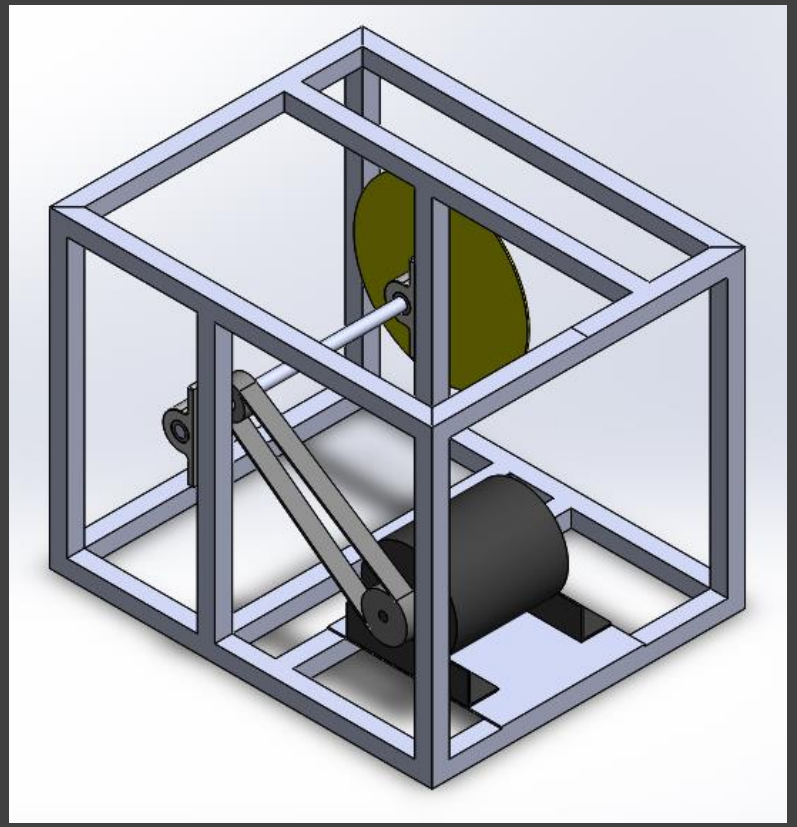

Prototype Development - Prototypes

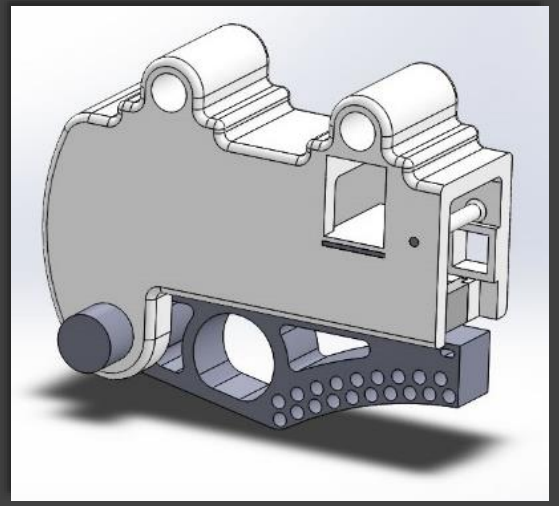

Test 1
- Housing Design
- Brake Design
- Firing Circuit

Test 2
- New Housing Design
- Firing Circuit Modifications

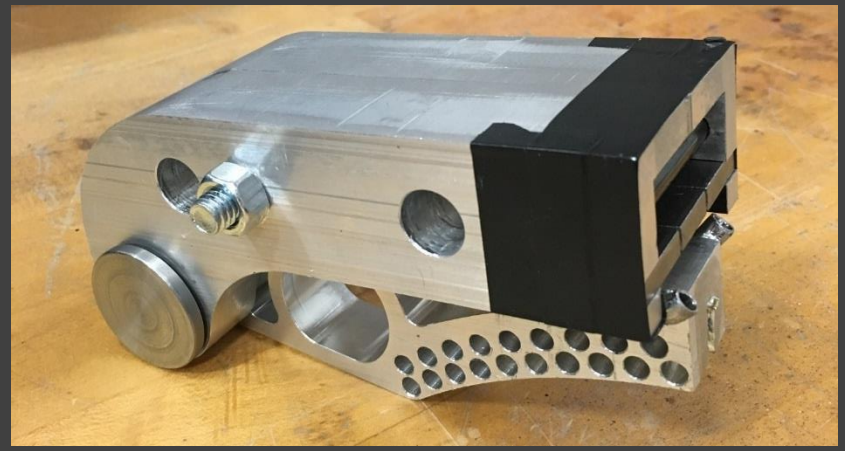

Test 3
- Thinner Brake Design
- Sensing Circuit and Firing Circuit Combined
- Shaft Modifications

Circuit System – Firing Circuit

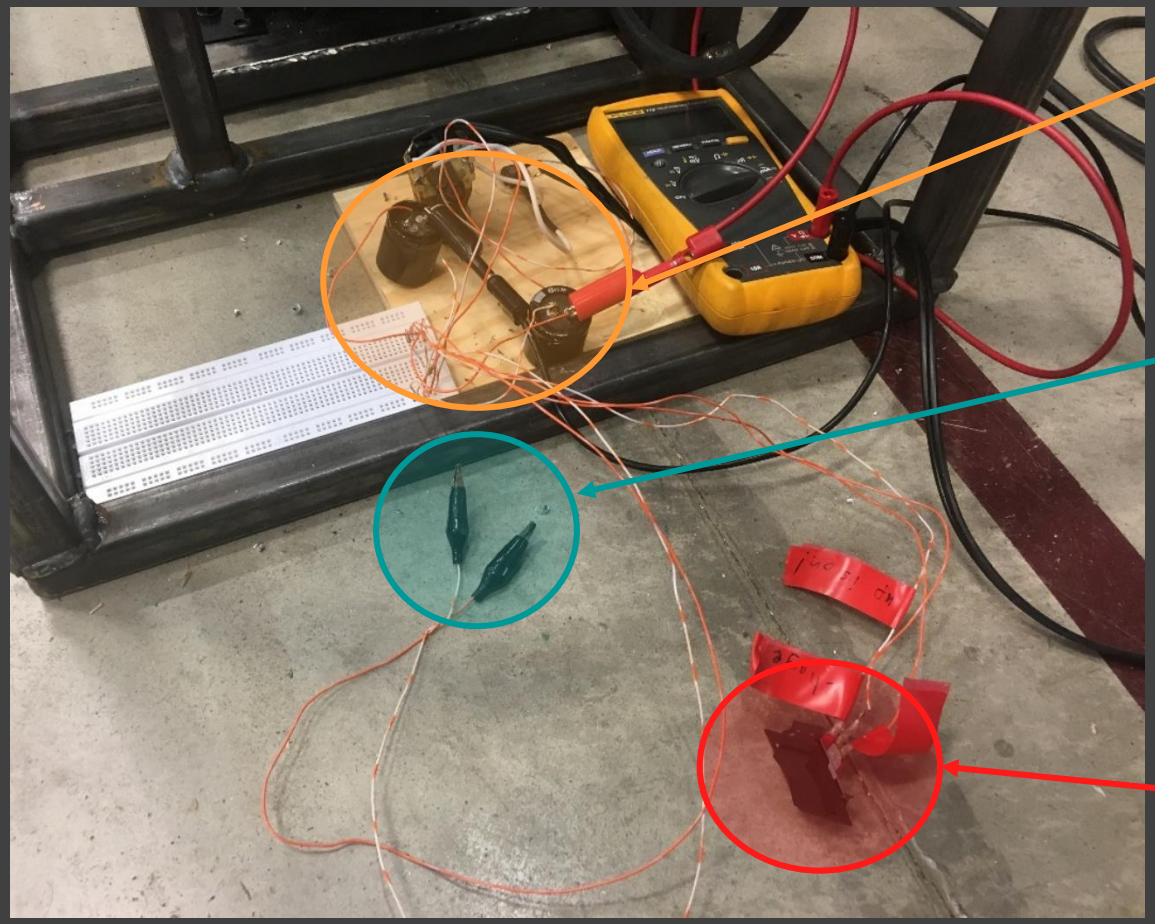

Circuit System – Sensing Circuit

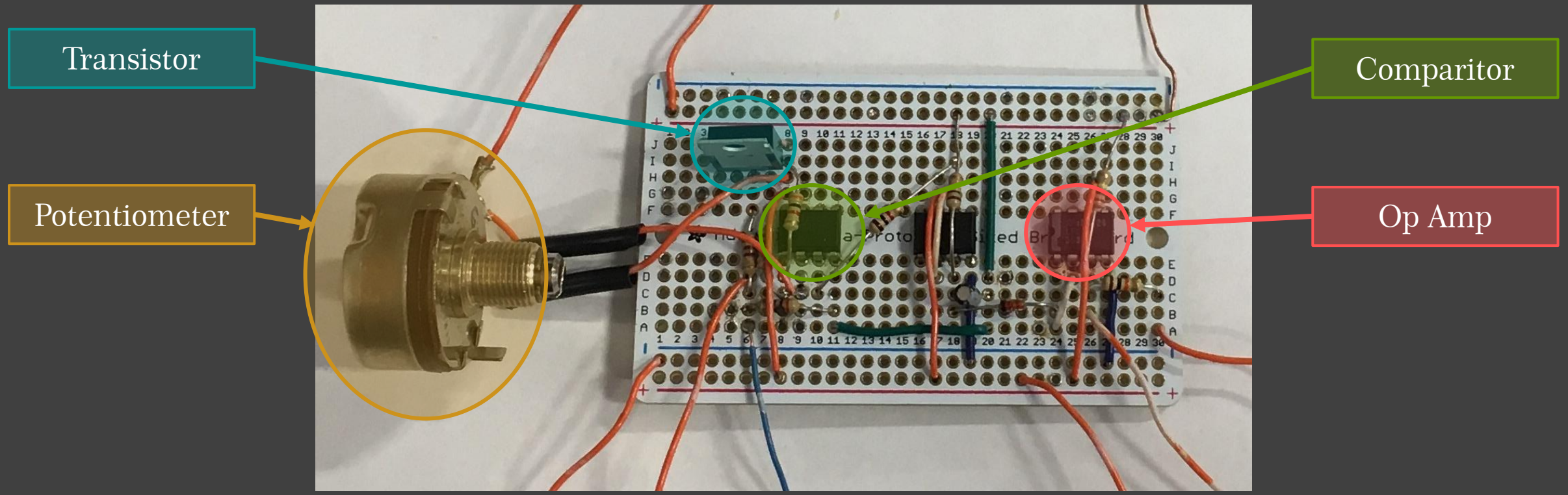

Mechanical Design – Housing

Aluminum Brake

Inside Brake Housing

Outside Brake Housing

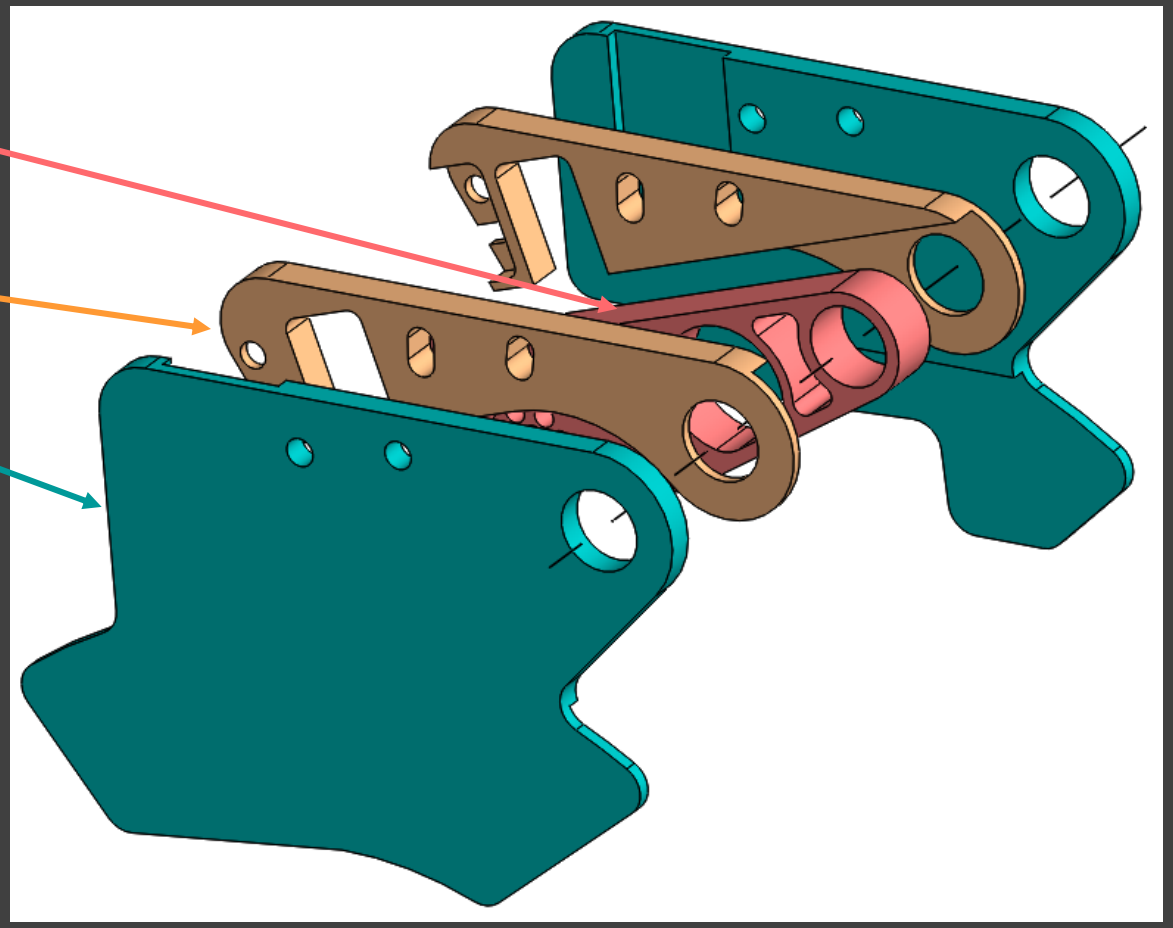

Business Analysis

Item	Cost per Unit
Total Circuitry System	$ 34.31
Total Mechanical System	$ 12.20
Labor and Installation Cost	$ 97.50
Overhead Cost	$ 61.72
Total (Breakeven Cost)	$ 205.73

- *Units are made with our design*
- *1000 units are made per year*
- *$15/hr labor wage*
- *30% overhead*

Design Norms

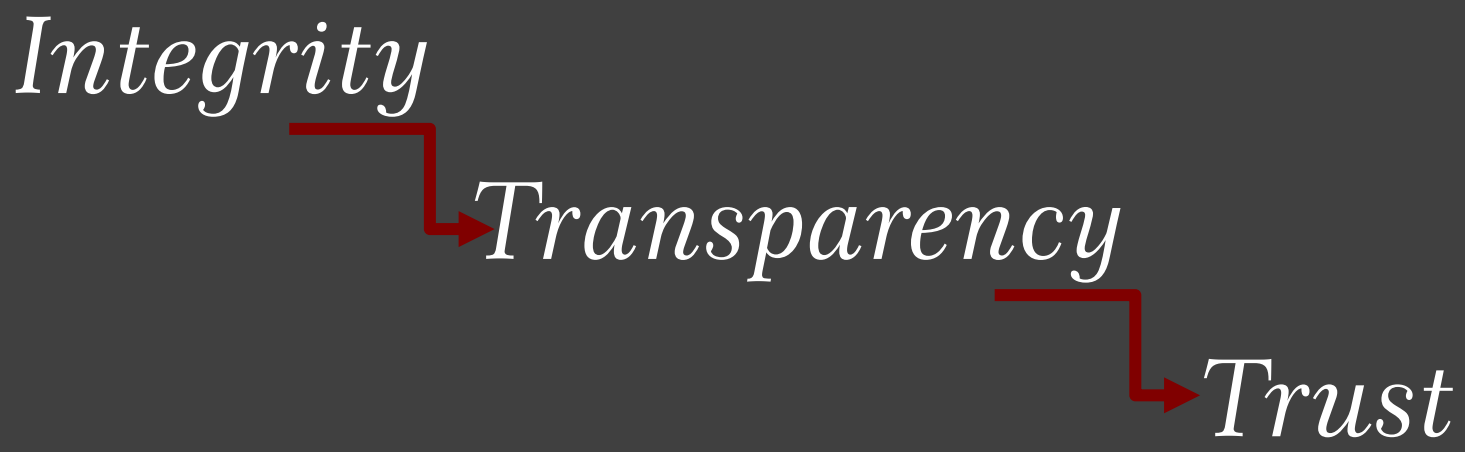

Questions?

Special thanks to:

- *Professor VanAntwerp*
- *Chuck Holwerda*
- *Phil Jasperse*
- *Professor Michmerhuizen*