Team Crayowulf

Calvin College 1876

Introduction & Objective

Professor Joel Adams from the Calvin College Computer Science Department initially developed the idea for this project. Professor Adams wanted a mini computer cluster with an eye-catching enclosure for the system designed by mechanical engineering students. A liquid cooling system would also be implemented. This new system, called Crayowulf, will be used by the computer science department for research and educational purposes.

Design Criteria

- The cluster consists of 5 Nvidia Jetsons
- The nodes communicate in a head node - worker node relationship
- The case is designed for easy maintenance and accessibility
- The case incorporates 3D printed parts where appropriate
- The case and cooling is conducive to a teaching environment
- The cooling system keeps the Nvidia Jetsons at or below 60°C

Ben Kastner, CS
Philip Holmes, ME
Peter Oostema, EE & CS
Noah Pirrotta, ME

Node Configuration

The computer cluster is made up of five Nvidia Jetson TX2 developer boards. These are small computing units with approximately the same computing power as a mid-range laptop. They are networked together and can work on the same problem simultaneously.

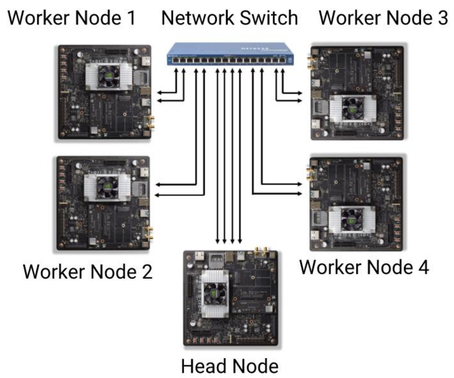

Cooling Design

Overheating of processing units can cause the lifetime of these components to decrease. Liquid cooling computers is known to be very effective at dissipating heat. The Crayowulf liquid cooling loop consists of 5 aluminum water blocks, a radiator, a pump, and a reservoir, all connected in series. Deionized water is pumped through the closed cooling loop. The water blocks, which attach to the Nvidia Jetsons to absorb heat from the processors, and the reservoir, were designed and fabricated by Team Crayowulf.

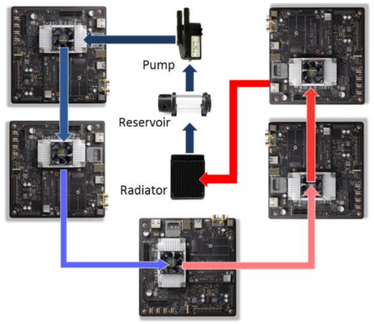

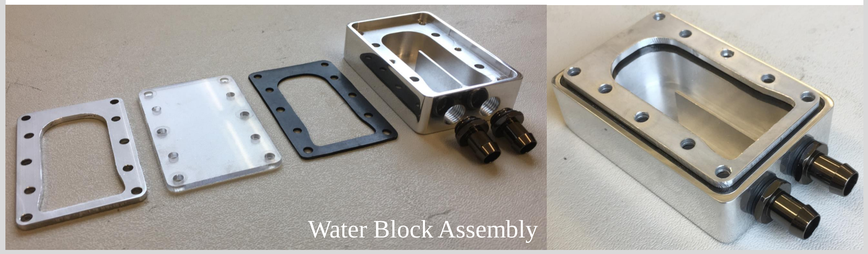

Case Design

The selected case design sports a multi-material body, consisting of both metal and 3D printed components. The external paneling and internal skeleton are made entirely of aluminum, while specific components, such as air vent grills, are 3D printed.

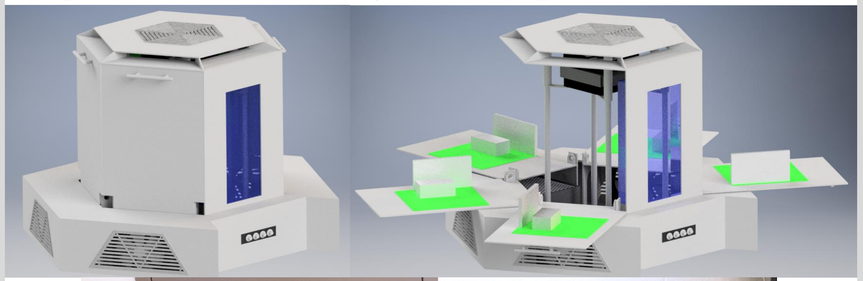

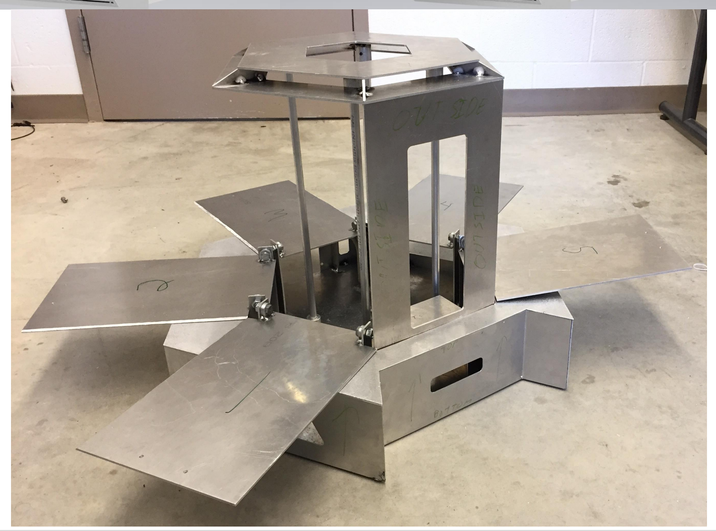

Encryption Implementation

The system uses quantum secure cryptography from Microsoft that is based on Supersingular Isogeny Elliptic Curves. A key is generated and ciphered with the data being sent using RC5. This allows for a secure command shell to use the cluster.

Simplified Illustration of Encryption:

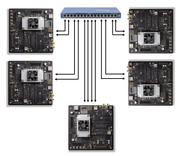

Crayowulf

Quantum Computer

Encryption Key

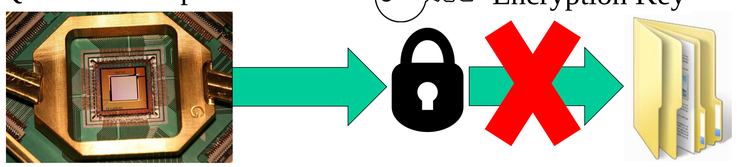

Electrical Design

An auto power-on circuit turns on the Nvidia Jetsons several seconds after the power supply is turned on.

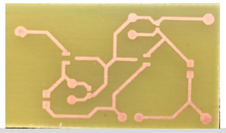

An LED array shows the system temperatures and processor usage.

Acknowledgements

Machine Shop: Phil Jaspers
Industrial Consultant: Eric Walstra
CS Dept: Professor Joel Adams
CS Dept: Chris Wierenga
Engr Dept: Chuck Holwerda
Advisor: Professor Michmerhuizen