Team 20: The Golden Oil

Project Proposal and Feasibility Study

Authors

Emma Huynh
Preston Ji
Charlotte Ntim
Kyle Redenbach
Maame Sarpong

ENGR 339/340 Senior Design Project
Calvin College

December 11th, 2017

Executive Summary

Our project objective is to design a plant producing sesame oil from seed via mechanical pressing followed by solvent extraction. The extracting solvent is hexane. The target production is 62,000 metric tons of oil per year.

We will:

1. Design the major pieces of equipment in the process;
2. Specify the operating conditions;
3. Estimate the cost of our equipment and the cost of production;
4. Determine whether it is economically advantageous to establish the designed production plant.

Table of Contents

1. Introduction

1.1. South Sudan Sesame Oil Case

South Sudan is known for its large production of sesame. However, as the country lacks the industrial capacity to produce sesame oil, most of its sesame oil is made on a small scale and farm to farm basis.[1] The current situation in South Sudan inspired our team to design an industrial chemical plant that produces 10,750 tons of sesame oil per year. This capacity corresponds to 5.8% of the worldwide sesame oil production.[2]

1.2. Properties of Sesame Oil and Seed

1.2.1. Composition

Compared to other seeds, such as soybeans which contain oil, sesame seeds have an exceptionally high oil content. Sesame seed contains close to 50 wt% oil.[3] Sesame oil is composed of the following fatty acids: linoleic acid (41%), oleic acid (39%), palmitic acid (8%), stearic acid (5%), and other components in small amounts.[4] (Composition may vary depending on seed and oil variety.)

Table 1: Physical and chemical properties of the sesame seed and product[5].

Table 1. Physical and functional properties of WSS, SC and DSF

Properties	WSS	SC	DSF
Bulk density (g/ml)	0.763 ± 0.01^{a}	0.67 ± 0.00^{b}	0.70 ± 0.00^{c}
True density (g/ml)	1.05 ± 0.12^{a}	1.10 ± 0.00^{b}	1.11 ± 0.00^{b}
Porosity (%)	27.33 ± 0.20^{a}	39.5 ± 0.25^{b}	36.22 ± 0.00^{c}
WHC (%)	65.236 ± 1.895^{c}	84.11 ± 1.01^{b}	234.70 ± 1.09^{a}
FAC (%)	70.533 ± 1.08^{c}	150.42 ± 0.73^{b}	181.61 ± 2.66^{a}

WSS-Whole Sesame Seed, SC-Sesame Cake, DSF-Defatted Sesame Flour, WHC-Water Holding Capacity, FAC- Fat Absorption Capacity.

Table 2. Proximate composition of WSS, SC and DSF

Nutrients	WSS (Gopalan et al [27]	WSS	SC	DSF
Moisture (g %)	5.3	5.18 ± 0.86^{b}	7.8 ± 0.8^{a}	4.06 ± 0.3^{c}
Fat (g %)	43.3	44.53 ± 0.6^{a}	0.76 ± 0.4^{b}	0.05 ± 0.02^{c}
Protein (g %)	18.3	18.30 ± 0.14^{c}	44.51 ± 0.73^{b}	47.28 ± 0.25^{a}
Crude Fiber (g %)	2.9	3.67 ± 0.15^{a}	2.36 ± 0.2^{c}	2.45 ± 0.16^{b}
Ash (g %)	5.2	4.13 ± 0.7^{c}	9.18 ± 0.6^{a}	8.68 ± 0.43^{b}
Carbohydrate (g %)	25	24.19 ± 0.72^{c}	35.39 ± 0.95^{a}	37.48 ± 0.6^{b}

WSS-Whole Sesame Seed, SC-Sesame Cake, DSF-Defatted Sesame Flour

1.2.2. Nutrients and Health Benefits

Sesame oil is a nutrient-dense food. 14.8 mL (1 tablespoon) of oil contains about 120 calories. Sesame oil also provides 40 mg of omega-3 fatty acid per tablespoon of oil.[6] This is an essential fatty acid that must be obtained from food. According to University of Maryland Medical Center, it helps lower the risk of arthritis and other inflammatory disorders[7] The sesame oil contains phytosterols. This is a plant-derived fatty compound that resembles cholesterol in its chemistry and function. It reduces cholesterol absorption into the blood as much as 50% according to the Linus Pauling Institute.[8] Phytosterol can also help lower the blood level of low-density lipoprotein, which is known to increase the risk of heart disease when the blood level is too high.[9]

1.3. Current Production Methods

1.3.1 Expeller Pressing

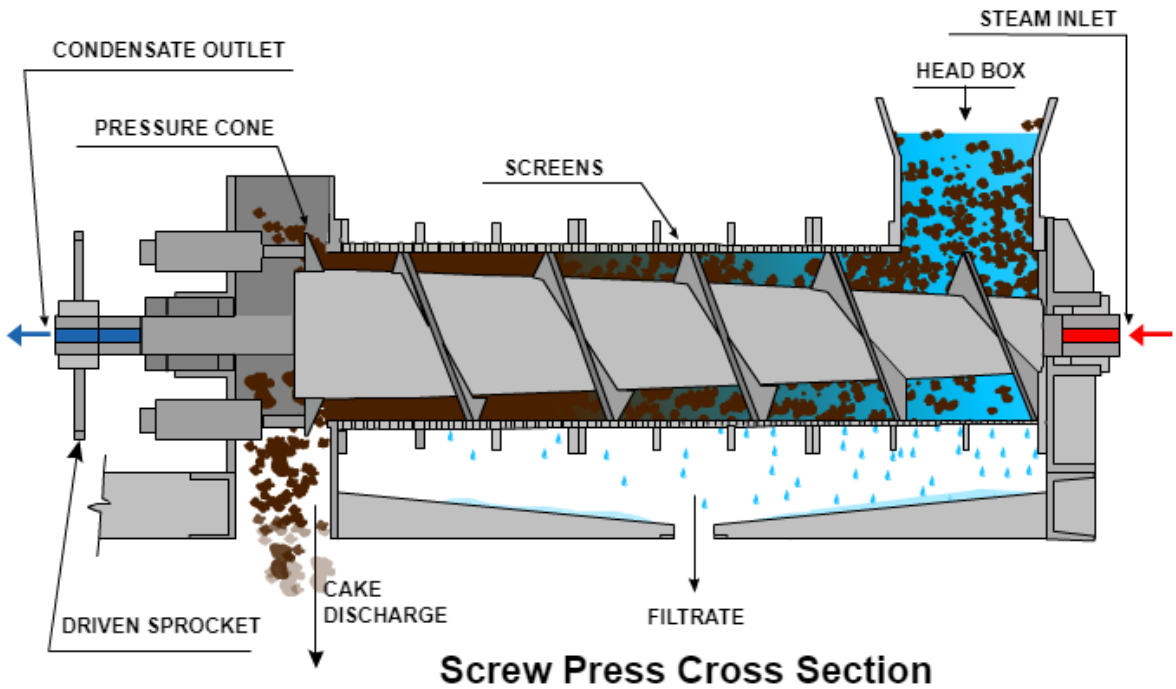

Figure 1: Diagram of a typical expeller press[10]

Expeller press is a screw-type machine that presses oil seeds through a caged barrel-like cavity. Raw materials enter through the head box as shown on Figure 1 and the waste products exit the other side. The machine uses friction and continuous pressure from the screw drivers to move and compress the seed material. The oil seeps through small openings that do not allow solids to pass through. Afterwards, the feed is formed into a hardened cake, which is removed from the machine[10].

Expellers can be used with almost any kind of oilseed and nuts. The process is relatively simple and not capital-intensive ($6,000 ~ $8,000).[11] While the smallest solvent extraction plant would have a processing capacity of 100-200 tons per day, expellers are available for much smaller capacities, starting from a few tons per day.[12]

Because there are no solvent residues in the expeller pressed oil, such oil is considered cleaner, purer.The process of extraction is the critical quality difference between oil brands often found in the natural foods market as opposed to mass-market or supermarket brands.[12]

The main disadvantage of the expeller pressing method is its relatively low oil yield. Even the most powerful presses cannot reduce the level of residual oil in the cake to below 3~5%.[12] Though such oil residual may be acceptable in the case of oil-rich sesame, at high processing rate the size of the press needed to accomplish such oil yield may be unrealistic. Since most of the oil in the cake can be readily recovered by solvent extraction, a two-stage processes (pre-press followed by solvent extraction) are now widely applied in edible oil industry.

1.3.2 Solvent Extraction

The solvent extraction process recovers oil from oil-bearing materials by using a suitable type of volatile solvent. The chief advantages of the process are: (1) oil recovery is nearly complete; (2) proteins

are not denatured in this process. Proteins are important in this project because the waste product may be sold as animal feed; The principal disadvantages of the solvent extraction method are: (1) fire hazard is very high because the solvent involved is volatile and flammable; (2) more sophisticated technical control is necessary; and (3) equipment and materials may not be available in the country where the plant is built.[13]

2. Project Management

2.1. Team Organization

The team consists of five senior chemical engineering students. The faculty advisor is Jeremy VanAntwerp, a chemical engineering professor at Calvin College. The industrial advisor is Phil Bronsma, an industrial chemist. The team has 45-minute weekly meetings with the faculty advisor. Also, the team members meet weekly, typically two to four hours, to work on the design project. The meetings are scheduled to secure quality project time and to promote progress. Literature articles, research summaries, minutes, presentation slides, Excel sheets, and other documents are stored and managed in the team's Google drive folder. Selected key documents such as posters and reports are available at the team's webpage: http://engr.calvinblogs.org/17-18/srdesign20/

2.2 Design Norms and Faith Integration.

For this project, we focus on transparency, stewardship, and cultural appropriateness. These criteria allow us to quantify how well our project meets both ethical and technical requirements. Firstly, in terms of transparency, we want the design process and the design itself fully disclose to the public. The design should promote honesty and communicate in a way that non-engineers (customers) can understand as well. Secondly, in terms of stewardship, we are responsible to take care of the Earth because it is God's good creation. Therefore, we are conscious that our design should use resources cautiously and thoughtfully. We also need to pay attention on harmful chemical releases and other environmental effects that may be involved in the process. Lastly, in terms of cultural appropriateness, we are aware that our designs should not only alleviate labor burdens, but also preserve wholesome aspects of the cultures we approach (in this case, South Sudan, the U.S, and other developing countries).

Colossians 3:23 "Whatever you do, work with all your heart, as working for the Lord rather for people": Throughout the time we spend on this project, the team plans to work diligently and effectively not only because we want to come out with good results, but because it is the mind posture we should have with everything we put our hands to

2.2. Schedule

Tasks to be completed are usually listed on the senior design Moodle page or established at the team's weekly meeting with the faculty advisor. Tasks are marked off after they have been completed. Leadership is rotational with each team member in charge of maintaining the schedule for a month. The team leader periodically monitors each team member's progress and helps the team to meet all deadlines.

In cases where the team is falling behind, a compromised deadline is set and dedicated project time is scheduled to meet new deadline.

2.3. Budget

The project is carried out without the need to purchase any hardware, software, or equipment. The design is theoretical and there will not be any development of a physical or tangible prototype. Therefore the cost of this project will be $0 and budget management does not apply.

2.4. Method of approach

The team came up with a preliminary process about the extraction oil from seed. With this process, we constructed a material balance and identifies the key equipment need for the extraction process. The team then delved into researching the market of sesame seed, solvents used for extraction of oil, and sesame oil. Four books relating to the production of sesame oil were ordered for references. Literature research papers were gathered from a variety of databases including Google Scholar and interlibrary loan.

In additional to the design process above, the team visited Zeeland Farm Services (ZFS) in Zeeland, Michigan. ZFS is a family-owned and operated business in the agricultural and transportation industries.[14] It primarily produces soybean oil (and resulting animal feed) by hexane extraction. The visit offered the team a practical view of the design project. We obtained knowledge on the typical capacity of the system, number of workers to operate the system, how the solvent comes into contact with the flaked soybean seed, and how hexane is separated and recycled from oil and cake. After hexane is removed from the oil, the crude soybean oil goes through a refinery process before it is sold to the market.

3. Sesame Oil Production System

3.1 Scale of Production and Plant Location

3.1.1. The Present 1% Case

The team aims to design a production plant that supplies 1% of the worldwide output of sesame oil. Therefore, the capacity of the plant is 10,750 tons per year, which equates to about 20% of South Sudan's sesame oil output.

3.1.2. A Potential 5% case

In the event that the economic analysis proves that 1% will not be feasible enough to turn a profit, the team will change the goal to 5% of the world's market supply. This would match the entire current South Sudan output per year.

3.2. Solvent Selection

3.2.1. Potential Solvents

To choose a reasonable solvent, the team consulted scientific literature to evaluate alternative solvents. In an article by Tir, et. al., the effects of various solvents on the yield and properties of oil extracted from Algerian sesame seeds were studied.[15] Extractions were carried out using the following solvents: hexane, ethanol, acetone, dichloromethane, isopropanol, hexane-isopropanol mixture, and chloroform-methanol mixture. 50 g of crushed dry sesame seed was refluxed in a Soxhlet apparatus using the previously listed organic solvents. The sesame oil yield obtained ranged from 28.86% to 52.83%. The results of the study is shown in the table below.

Table 2: Results of the alternative solvent study[1]

Solvent	Oil yield (%)	Total sterols (mg/100 g oil)	Total tocopherols (mg/kg oil)	Dielectric constant	Boiling point (°C)	Surface tension (dyne/cm)	Liquid viscosity (cPoise)	Dipole moment	TLV-TWA (ppm) a)
Hexane	43.76 ± 0.81	581.69 ± 19.87	383.42 ± 11.82	1.89	69	18.4	0.312	0.0	50
Dichloromethane	55.50 ± 0.56	649.04 ± 45.41	408.89 ± 5.41	9.08	39.8	28.0	0.513	1.8	100
Isopropanol	43.96 ± 1.48	712.92 ± 21.25	556.93 ± 16.67	18.6	82.5	20.8	2.4	1.66	400
Chloroform	–	–	–	4.81	61.2	27.1	0.562	1.1	10
Acetone	37.24 ± 2.73	671.82 ± 23.00	417.74 ± 0.19	21.5	56.1	23.7	0.316	2.9	750
Methanol	–	–	–	31.2	64.7	22.53	0.59	1.7	200
Ethanol	30.32 ± 0.64	620.07 ± 22.30	508.30 ± 23.18	25.7	78.3	25.7	1.22	1.7	1000
Hexane:isopropanol (3/2 v/v)	48.15 ± 3.35	679.95 ± 20.88	289.64 ± 40.79	8.57	–	–	–	–	–
Chloroform:methanol (1/1 v/v)	44.55 ± 4.42	635.11 ± 6.55	439.05 ± 11.95	18.01	–	–	–	–	–

a) TLV, threshold limit value for an air contaminant under ACGIH regulations; TWA, time-weighted average.
Data from Refs. 1, 3 and 15. The dielectric constant of the solvent mixtures was determined using the formula: $\varepsilon_{(mixture)} = (\%A\varepsilon_A + \%B\varepsilon_B)/100$, where ε_A is the dielectric constant of the solvent A, ε_B is the dielectric constant of the solvent B and $\varepsilon_{(mixture)}$ is the dielectric constant of the binary mixture.

Methanol and ethanol are safer than hexane with lower toxicity and lower flammability. However, the main constituents of sesame oil are esters derived from glycerol and aliphatic saturated or unsaturated fatty acids. The aliphatic structure gives alcohols such as ethanol and isopropanol a limited solubility. Unlike the alcohols, hexane has an aliphatic structure which makes it very miscible with oil. Therefore, methanol and ethanol are not favorable as their performance is limited by solubility.

Dichloromethane was identified to be the solvent that extracts the most oil compared to all other solvents. Unfortunately dichloromethane is extremely toxic and has a carcinogenic nature, making it unsuitable for oil extraction in the food industry.

While its yield is not optimal, acetone is also toxic and therefore is not suitable for our project. The paper rules out chloroform due to similar concerns.

3.2.2. Isopropanol or Hexane

The article recommends isopropanol as the solvent to extract sesame seed oil. Isopropanol is less flammable than many other solvents; it exhibits a lower toxicity and is commonly available. Additionally, the study concluded that the amphiphilic structure of isopropanol allows the extraction of an oil more rich in sterols and tocopherols, indicating a higher quality.

For the design project, however, our team chose hexane as our solvent. Isopropanol, while having a similar extraction performance compared to hexane, has a higher boiling point and higher heat of vaporization, resulting in a significant increase in energy cost.[15,16] Additionally, the difference in the material cost is significant. According to ICIS, hexane is $0.21/lb but isopropanol is $0.65/lb, about three times the cost of hexane.[17] Thus, for industrial purposes, isopropanol is not a suitable substitute of hexane.

The team also considered a mixture of hexane and isopropanol. The option was rejected because its advantage is minimal, but the mixture poses a greater fire hazard[15] and complicates the separation steps of the design.

3.2.3. Hexane Toxicity

Hexane is commonly used extract vegetable oil in industry because it is relatively inexpensive and produces a high oil yield. To further justify our solvent choice, the team investigated the health effects of hexane. After hexane recovery, the amount of hexane left in the edible oil is in the parts per million range. In short, such a small amount of hexane has had no established effects on human and animal health.

According to the EPA, the main source of exposure to hexane is through inhalation.[18] EPA has classified hexane as a Group D chemical, with no evidence to human carcinogenicity. The known danger of acute hexane inhalation are mild central nervous system (CNS) effects, including dizziness, slight nausea, and headache. Chronic exposure to hexane in air is associated with polyneuropathy in humans, with numbness in the extremities, muscular weakness, blurred vision, headache, and fatigue. Neurotoxic effects have also been exhibited in rats.[18] However, the miniscule amount of exposure through ingestion has no documented health effects. Therefore the EPA has allowed hexane to be the main solvent for vegetable oil extractions.

The FDA does not monitor hexane in food nor do they require testing of its quantity in foods.[19] Under the FDA hexane is regulated in hops and some spices; the Code of Federal Regulations, Title 21 Chapter I, Sec.173.270 Hexane gives a maximum of 25 ppm in certain extracted spices.[20] Regarding hexane in our product, however, toxicity by ingestion is not seen as a threat.

In conclusion, the use hexane is approved by proper authorities and our consumers do not need be afraid of health risks from consuming our sesame oil.

3.2.4. Safety Precautions

Though hexane is safe to oil consumers, it is still an occupational hazard. The team researched safety precautions to protect the plant operators. Workers handling hexane should do so with protective clothing and in ventilated areas.[21] The National Institute for Occupational Safety and Health (NIOSH) has established a recommended exposure limit to be 50 ppm a 10-hour workday and a 40-hour workweek.[22]

Therefore, we have investigated the hazards of our production system and will pursue the design with safety precautions in mind.

3.3. Overview of the System

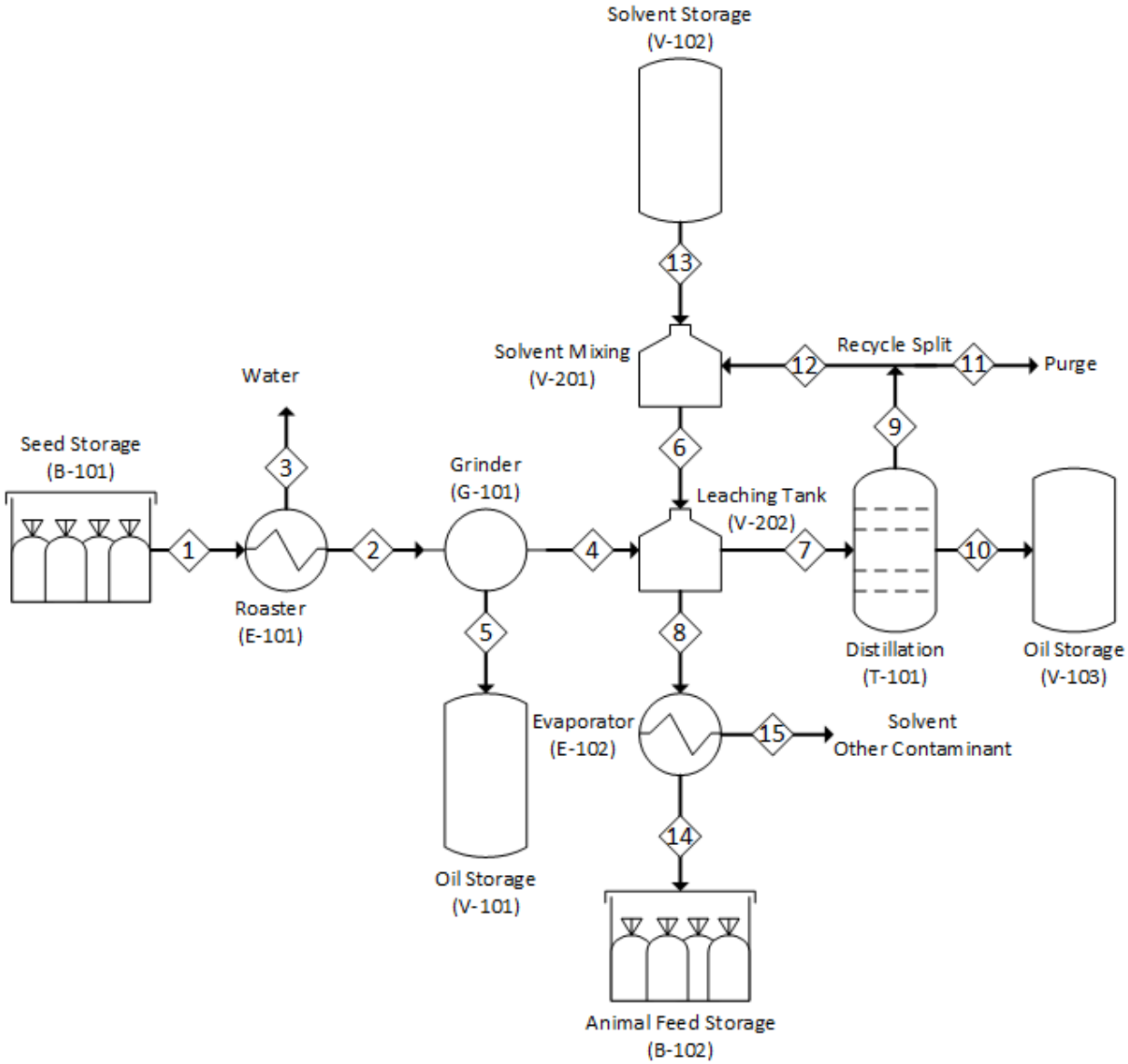

Figure 2: Process flow diagram of the sesame oil production system

3.4. Key Equipment in the Process

3.4.1. Seed Storage (B-101)

The team plans on storing 125,846 tons of sesame seed for the production throughout the year (8,000 hr). The storage is divided into 12 bins, one for each month.

3.4.2. Roaster (E-101)

The sesame seeds first go through the roaster at a rate of 4.37 kg/s. An elevated temperature reduces the viscosity of the oil and therefore allows easier mechanical pressing. Presently, we assumed that all the moisture in the seed (about 6 wt%) is evaporated.

3.4.3. Grinder and Settler (G-101)

Sesame seed is fed to the grinder at a rate of 4.164 kg/s. In the screw press, the sesame seed is broken up into a favorable size so that oil leaks out. Though a higher oil yield is achievable with a bigger grinder, we assumed that 50% of the oil is obtained and the remaining is sent for solvent extraction. A settling tank is added to collect the oil and to prevent any undesirable solid from entering the oil storage tank.

3.4.4. Leaching and Settler (V-202)

The cake that comes out of the grinder enters the leaching tank. The solvent, hexane, contacts the cake at a flow rate of 11.14 kg/s, determined by a solvent to seed ratio of 2.5. The ratio is calculated from an example hexane leaching system, assuming linear scale up based on the oil content to be processed.[22] An agitation system is incorporated in the leaching tank to promote the dissolution of oil into hexane. We assume that 99% of the total oil is extracted. After the flows are well mixed, a settling tank (possibly a hydrocyclone) separates the liquid phase and the solid phase.

3.4.5. Distillation Column (T-101)

The solvent is separated from the miscella (mixture of solvent and oil). Presently we assume that the oil product is essentially pure of hexane and we lose 1% of the total oil by the overhead product. We assumed a recycle ratio of 20:1 at the purge splitting point.

3.4.6. Evaporator (E-102)

The cake from the leaching unit is evaporated to remove its volatile contaminants. We assume that 1 % of the total solvent and 1% of the total oil are lost.

3.4.7. Storage Tanks (V-101, V-103)

Tank V-101 holds the pressed oil incoming at a flow rate of 1.09 kg/s. Tank V-103 holds the extracted oil incoming at a flow rate of 1.06 kg/s. The two types of oil are stored separately due to market preferences.

3.4.8. Animal Feed Storage (B-102)

This equipment holds the animal feed obtained from the evaporator at a rate of 2.00 kg/s.

3.4.9. Boiler (not shown on PFD)

A boiler is needed to supply heat. Our utility is low pressure steam because the temperature of our system is not very high (for example, hexane boils at 68.75 ^{0}C at 1 atm)[16]. Other forms of utility are ignored in the current level of design.

3.4.10. Other Equipment

Heat exchangers, pumps, valves, pipes, and conveyor belts are ignored in the current level of design but will be considered in the future. For example, a cooler will be added to cool down the recycled hexane. Conveyors are needed to move the solid and pumps are needed to transport the liquid. A vacuum condition will also be considered for safety concerns.

3.4.11. Sesame Oil Refinery

We are aware that further refining process may be needed for our sesame oil to be marketable. A full refining process usually include four steps: conditioning, neutralization, washing, and drying. Conditioning transforms non-hydrate phospholipids into their hydrate form by breaking down metal-phosphatide complexes with a strong acid (such as phosphoric acid). Neutralization removes free fatty acids and residual gums. Washing removes residual gums by hot water. Drying removes moisture under vacuum conditions. Additional step, deodorization, can be added to remove odor substances.[23] Currently the design produces crude sesame oil. The team will consider if and which refinery steps are necessary for the next level of design.

4. Business Plan

4.1. Market Survey

4.1.1. Market Scale and Distribution

The global production of sesame seed is 6,235,530 metric tons in 2014. Based on data from 1993~2014, 1,075,000 tons of sesame oil is produced annually.[24] Asian and African countries are the top producers and consumers of sesame oil and its products. The demand and consumption for sesame products have increased phenomenally. The global market continues to indicate a high growth with an average annual rate of 21.6% from 2007 to 2015. In 2015, the gross profit from market sale was $12.61B, moving up by 100.4% against the previous year. This trend is expected to continue throughout the forecast period 2017-2025 thanks to "disposable income growth, population growth, and growth of baking." [25] In addition, the expected growth is also a result of the fact that the increasing usage of sesame oil for purposes other than cooking, such as cosmetics, health, and wellness products.[26] The figure below shows the distribution of the global sesame oil production.

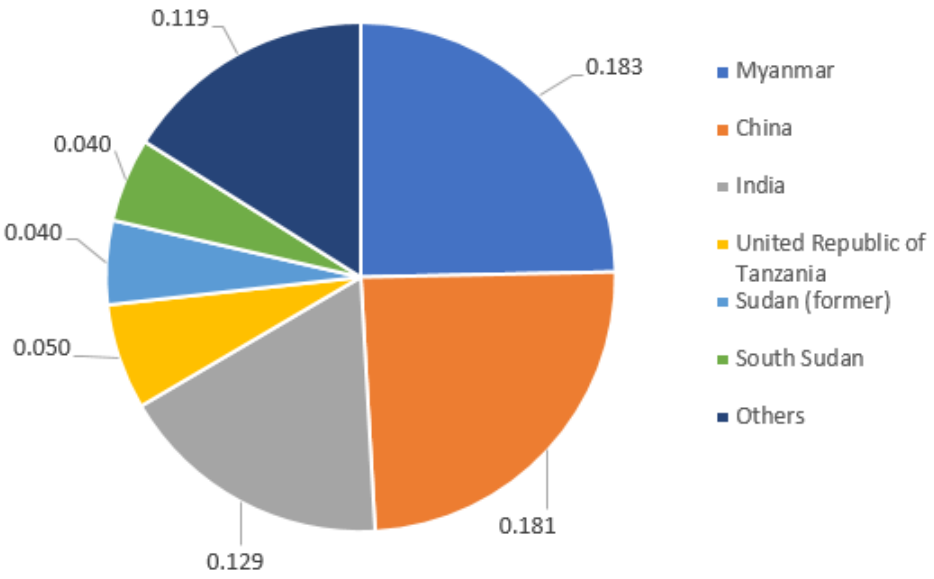

Figure 3: World's leading producer of sesame oil (1993-2014)[24]

The average annual growth rate (AAGR) in net sales of top producing countries continue to skyrocket. From 2007 to 2015, AAGR of Myanmar, China, and Tanzania is 0.9%, 2.4%, and 36.9% respectively.[24]

In addition to traditional markets, sesame oil is also gaining popularity in Europe. Europe imported 12,000 tons of sesame oil in 2015. The United Kingdom is the most important market with 40% of consumption. Since 2011, imports increased steadily at an annual rate of 7.1%.[27]

4.1.2. Market Stability

The market price of sesame oil is not stable and has fluctuated significantly every year. Factors affecting the market include high demand for the seed and short supply for the sesame products. The high dependence of agriculture on the climate conditions in the developing countries makes the yield of sesame seed unstable.[28] This fluctuation could adversely affect the financial projections of this project if the price of sesame seed increases or the prices of oil and by-products decline. Moreover, because there is no international organization that unifies sesame oil market policies and stabilizes the oil market, it has been challenging to find a reliable report on world sesame price. Therefore, we consulted the commodity bulk price of wholesale suppliers. See the prices of materials and production below (Section 6.2.2) Last but not least, the prices vary by the type of sellers and quality of the oil.

In conclusion, the market for sesame oil is has potential for our design.

4.2 Cost Estimate

4.2.1. Overview

The cost estimate is the strongest evidence of feasibility (or infeasibility) for our design. We evaluated the purchase cost of each piece of equipment and estimated a total capital investment of $35.21M. Based on the production capacity and a preliminary energy balance, we estimated annual utility, maintenance, and labor cost to be $507K, $3.10M, and $3.65M respectively. We investigated the prices of the materials involved and obtained material cost and revenue. Assuming 15% interest rate and a 20 year study period, our breakeven price of sesame oil is $2,670/t, which is 6.9% lower than the market price ($2,870/t). Therefore, the sesame oil production plant is profitable.

4.2.2. Prices of Materials and Products

The materials needed are sesame seed and n-hexane. The profitable products are sesame oil and the leftover cake as animal feed. The team researched on wholesale prices and discovered that sesame seed and oil prices vary significantly from seller to seller. To obtain a reasonable estimate, we recorded the listed prices of 10 sellers of seed, oil, and hexane each and the listed prices of 6 (only 6 available) sellers of sesame animal feed. Only large-scale (metric ton magnitude) suppliers, such as Rama Gum Industries (India) Limited for sesame seed, Tianjin Yuanlong Chemical Industry Co. for hexane, Qingdao Ocean Import and Export Co. for sesame oil, and Multiko Packaging for seed meal, were consulted. We removed the maximum and the minimum to reduce the outlier bias. Then we obtained the average prices of our materials and products. Next we intend to conduct a more thorough market research considering different types of seed and oil and employing more sophisticated statistical analysis.

Table 3: Average Prices of Sesame Seed, Hexane, Oil, and Cake (Animal Feed)[29,30,31,32]

Wholesale (Metric Ton Scale) Prices Listed on Alibaba				
Seller	Seed, $/t	n_Hexane, $/t	Oil, $/t	Animal Feed, $/t
1	~~300~~	~~900~~	~~275~~	~~300~~
2	350	1250	300	320
3	800	1250	1420	450
4	905	1500	1500	463
5	1150	1500	2000	600
6	1350	2000	3500	~~1500~~
7	1500	2000	4000	
8	1500	2000	5010	
9	1900	2000	5200	
10	~~2100~~	~~3100~~	~~5480~~	
Mean	1182	1688	2866	458
SD	456	325	1696	99

Note: *1. Any price range is replaced with the median value of the range.*
2. Any price on volume is converted to mass basis via density.
3. Any price not in USD is converted to USD via exchange rate as of 11 Nov 2017[33].
4. Prices are accessed on 10 Nov 2017.

Although sesame seed contains about 50% oil by mass, it is obvious that the average oil price ($2,870/t) is more than twice of the average seed price ($1,180/t). Hexane ($1,690/t) is more expensive than seed, but with solvent recovery only a small amount of fresh feed is needed. (We assumed a 20:1 recycle ratio in our current material balance.) In addition, animal feed ($460/t) provides a relatively small but sizable revenue. Therefore, sesame oil production is potentially profitable.

4.2.3. Total Purchase Cost

The team considered the major equipment of the production process. For each equipment, the purchase cost was calculated as a function of a key design variable. We used cost correlations available in design textbooks. We estimated the purchase cost of each piece of equipment based on the material or energy balance and obtained a total purchase cost of $6.670M. See the sections below for a more detailed explanation of each equipment.

Table 4: Major Equipment and Purchase Cost of Sesame Oil Production System

Overall List of Major Equipment							
Equipment		Equipment Size			Unit Price	#	Purchase Cost
Name	Sym.	Key Variable	Value	Unit	C_p, $		C_p, $
Seed Storage	B-101	Volume	609266	ft^3	261148	12	3133771
Roaster	E-101	Heating area	475	ft^2	441194	1	441194
Grinder (Screw Press)	G-101	Flow Rate	33093	lb/hr	795552	1	795552
Settler (Oil + Solid)	G-101	Settling area	8000	ft^2	559876	1	559876
Oil Storage (Pressed)	V-101	Volume	189230	gal	130170	1	130170
Solvent Storage	V-102	Volume	152210	gal	208804	1	208804
Leaching Tank	V-202	Agitator Duty	32.40	HP	55603	1	55603
Settler Tank (Hex. + Solid)	V-202	Settling area	8000	ft^2	559876	1	559876
Evaporator	E-102	Heating area	480	ft^2	334212	1	334212
Animal Feed Storage	B-102	Volume	74232	ft^3	99162	1	99162
Distillation (Hex. + Oil)	T-101	Weight	6192	lb	66094	1	66094
Oil Storage (Leached)	V-103	Volume	185445	gal	128836	1	128836
Steam Boiler	F-101	Duty	2.06E+07	Btu/hr	157201	1	157201
Total Purcahse Cost							6670350

4.2.3.1: Seed Storage (B-101) and Animal Feed Storage (B-102)

These were modeled as storage bins under "solids-handling systems"[34]. For sesame seed, we assumed one harvest per year. The growth cycle of sesame is 130 days[35] and multiple harvests are possible. We also learned from ZFS that some growers store their grain to sell at a higher price during the off season. Therefore, obtaining sesame seeds outside the harvest period is possible. However, the agriculture market fluctuates frequently and without detailed data (specific to a certain region) we cannot reliably estimate the availability of the seed year around. We decided to pursue a conservative estimate; our storage facility must be able to contain a year's (8000 hr) production. With a seed density of 608.7 kg/m^3 [36], our total storage volume is 207,000 m^3 (7.30M ft^3), which appears to be overwhelmingly large and far exceeds the upper limit of the cost function (by 73 fold). Therefore, we divided the storage facility into 12 smaller bins, one for each month, resulting in a purchase cost of $3.13M. For animal waste, we assumed a storage capacity to hold 7 days of production. This yields a purchase cost of $99K.

4.2.3.2. Roaster (E-101)

The roaster was modeled as an indirect-heat steam tube rotary dryer[34]. We chose rotary dryer because of its capacity to process a large amount of solid particles continuously. We chose indirect instead of direct heat dryer even at 40% higher cost. Indirect heat dryer offers better heat transfer control for low temperature applications (compared to direct heat dryer which operates at 250 ~ 1000 °C), avoids charring of the seed, and avoids contact with potentially harmful fuel exhaust gases.[37,38] We obtained a range of dryer diameters and process capacities.[37] After linear interpolation, the diameter of our dryer is 3.89 ft. We assumed a typical 10:1 length to diameter ratio[38], yielding a cylindrical area (drum peripheral area in the cost function) of 475 ft^2. Our roaster cost is $441K.

4.2.3.3. Grinder and Settler (G-101)

The grinder was modeled as a screw press under "solid-liquid separators"[34]. Its purchase cost is $795K, estimated according to a wet solid flow rate of 33050 lb/hr. As in Figure 1, the expeller allows oil to drip out from the sieves, which removes the majority of the solid. The grinder is followed by a solid liquid settling tank (also G-101, not individually shown on the PFD), so that small streams of oil is collected into a continuous phase. Also, oil is further purified to remove any solid that has leaked through the sieves into the oil. The settling area is not available without detailed design, so we assumed maximum settling area of the cost function and obtained a conservative estimate of $560K.

4.2.3.4. Leaching Tank and Settler (V-202)

The leaching tank was modeled as a closed vessel turbine agitator[34]. The spacetime was assumed to be 10 min. Since hexane takes the majority of the flow and solid particles are suspended in hexane, we used hexane density of 653 kg/m^3 [16] and obtained the size of the vessel (3,236 gal). The agitator power is 32.36 HP. The vessel itself was modeled as a floating roof storage tank to account for the volatile solvent. Together the vessel and the agitator cost $56K. A settler (also V-202, not individually shown on the PFD) was added to separate the hexane-oil liquid phase and the remaining solid. Its cost was estimated in the same way as as G-101 to be $560K.

4.2.3.5. Evaporator (E-102) and Distillation Tower (T-101)

Both pieces of equipment remove hexane from a mixture. In the evaporator we presently assumed a 1% loss of hexane, a small amount which we will burn in the furnace. However, this assumption may not be valid dictated by the detailed leaching design. In that case, we intend to install a condenser and add the hexane into the recycle stream. The evaporator was modeled as a drum dryer, which works well for a slurry[34]. Similar to the settler, we used the maximum heating area of the cost function and obtained a conservative estimate of $334K.

The distillation tower is more complex. We assumed that the operating pressure is 1 atm because the normal boiling point of hexane (69 °C)[34] falls within a suitable range. We calculated the wall thickness to withstand internal pressure using the ASME pressure vessel code formula[39]. We assumed that the vessel is vertical and calculated the additional thickness for wind and earthquake using the Mulet correlation[39]. To determine the vessel size, we assumed that the space time is 60 min, yielding a volume of 66.75 m^3, and the height is 15 m, yielding a common height to diameter ratio (L/D) of 6.3. Detailed design is required to determine the actual size. Since our chemicals are non-aqueous and the operating temperature is moderate, we chose carbon steel as the material of construction, with a density of 7.85 g/mL[40] and a material factor (F_M) of 1[36]. In the end, we obtained vessel cost (C_V) based on the weight of the equipment and added cost (C_{PL}) for platforms and ladders. Therefore purchase cost ($C_P = C_V F_M + C_{PL}$)[36] is $66K. Currently, we ignored the cost of plates or packing. Also, to obtain a high purity of oil, multiple pieces of separation is probably necessary.

4.2.3.6. Pressed Oil Storage (V-101), Leached Oil Storage (V-103), and Solvent Storage (V-102)

The team decided to storage the pressed and the leached oil separately because some customers prefer pressed oil that is solvent free[41]. Both oil storage were modeled as cone roof storage tanks[7-6]. The capacity was assumed to hold 7 days of production. We calculated their volume based on material balance and obtained purchase cost of V-101 to be $130K and that of V-103 to be $129K.

The solvent storage was modeled as a floating roof storage tank because hexane is volatile[32]. Likewise, the capacity holds 7 days of production and the cost is $209K.

4.2.3.7. Steam Boiler (F-101)

Roaster, evaporator, and distillation are the energy intensive equipment. The team performed preliminary energy balance using general temperatures, average heat capacities (mass basis), and heat of vaporization (ΔH_{vap}) of water[42] and hexane[36]. Our primary utility is steam. See utility cost (Section 4.2.5.1) below.

Therefore, the team installed a steam boiler (not shown on the PFD). Assuming 100% thermal efficiency at the boiler and each equipment, the boiler duty is 6,032 kW. The steam boiler was modeled as a fired heater[32] and its purchase cost is $157K. We ignored other energy generating equipment because steam duty is much greater than other forms of utility.

4.2.4. Total Capital Investment

The team used Lang's overall factor method to obtain a study estimate of 35%, which accounts for the construction of the plant (installation, piping, pumps, controls, building, etc).[43] We ignored the cost index of the equipment because the cost functions are given at a CE index of 500, which corresponds to the year 2006.[44] We think that it is sufficiently close to the contemporary time for the current level of feasibility study. We summed the purchase cost of the equipment, multiplied by a factor of 5.03 for a solids-fluids processing plant and a factor of 1.05 for equipment transportation.[43] Therefore, the total capital investment (C_{TCI}) is $35.23M.

4.2.5. Operating Cost

4.2.5.1. Utility Cost

The roaster, evaporator, grinder, distillation column, and heat exchangers will run on low-pressure steam and the pumps will run on electricity. Low pressure steam costs $6.60/t and electricity costs $0.10/kWh.[45] For the current level of feasibility study we only considered the most energy intensive steps. For the roaster, we assume that the seed is heated to 90 ℃ all the water is vaporized. For the evaporator and the distillation, we assume that the process occurs at 70 ℃ and all the hexane is vaporized. We obtained heat capacities and heat of vaporization of each species.[36,46] For any mixture such as sesame seed, we assumed a weighted average on mass basis. Therefore, the total duty of our design is 6,032 kW.

Table 5: Energy Balance of Roaster, Evaporator, and Distillation Tower

Energy Streams			
Stream	1	2	3
Equipment	Roaster	Evaporator	Distillation
Heating (Sensible Heat)			
T_i, C	25	40	40
T_f, C	90	70	70
ΔT, C	65	30	30
ΔH, J/s	484413	78124	1075282
Vaporization (Latent Heat)			
Species	WA	HE	HE
m, kg/s	0.205	0.109	10.815
ΔH, J/s	464144	39295	3890248
Total Duty			
Efficiency	100%	100%	100%
Total Q, J/s	948558	117420	4965530
Total Q, kW	949	117	4966
Type	Steam	Steam	Steam

Such duty requires a total low pressure steam flow rate of 2.7 kg/s assuming that steam is completely condensed into saturated water. With an 8000 hr/yr operating time, our utility requires about 76,900 tons of low pressure steam corresponding to a cost of $507K/yr. Utility cost of other equipment will be evaluated in the next level of design.

4.2.5.2. Labor Cost

Two methods were applied to calculate the number of operators needed in the plant and the total labor cost. The first method is a scale-up approximation. The number of operators is estimated based on our capacity and the capacity and number of operators at Zeeland Farm Services (ZFS). ZFS was chosen as the standard because its soybean oil production process is very similar to our sesame oil production process in terms of equipment and technical requirements. ZFS's oil refinery plant in Zeeland, Michigan, is capable of processing 160 million pounds of soybean oil annually. Currently, the company is producing approximately 40,823 tons of soybean oil per year[47]. The company has 30 people working in the processing plant and 10 people working in the refinery plant. Since we did not design the refinery plant this semester, we will focus on estimating the number of operators in the processing plant only. The team used linear correlation since no other correlation is available. Therefore, the number of operators in our plant is estimated to be 46 people.

The second method is the labor-related-operations method[43].This method evaluates the type and arrangement of the equipment, the multiplicity of the units, and the control of each process. For a preliminary estimate of the number of operators required per shift, the process is divided into the following sections with each section requiring at least 2 operators at a time: feed preparation system, mixing system, solid-liquid separation batch system, and vaporization system. The table below shows the number of operators in each section.

Table 6: Number of operators per section (basis: plant with automatic control)[43]

Operators Required	
Section in the plant	# of operators
Feed preparation system	2
Mixing system	2
Solid-liquid separation system	4
Vaporization system	2
Total (per shift)	10
# of shifts	5
Total (5 shifts)	50

Because our plant processes more than 100 t/day, the Seider textbook suggests to multiply the number of operators in solid-liquid separation continuous system by two. The plant will operate 24/7 (excluding downtime); therefore three shifts per day are needed. To account for to illness, vacations, holidays, and weekends, we decided to employ 5 shifts for each section. So the total number of operators needed is 50 people.

The second method was chosen because the actual scale-up in the first method may not be linear. Beside operators, we added 3 truck drivers, 2 office workers, and 2 salesmen to help the company function properly. Therefore, the total number of employees is 57 people.

We investigated the average amount of working time and the average salary of various jobs (see appendix, Table A.1).[48] In addition to paying salary, a company also pays to cover some benefits (health insurance, paid vacation, 401(k) plan, retirement, etc.). The benefits of an employee is approximately $6,251 (2015), 78% of which is paid by the company[49]. Therefore, the total labor cost is $3.65M/yr.

Table 7. Labor cost estimation for the company

Annual Labor Cost	
Payroll	$/year
Operators	3,139,003
Truck drivers	103,318
Office workers	71,749
Salemen	54,063
Recruitment Cost	2,000
Benefits	277,919
Total	3,648,051

4.2.5.3. Maintenance cost

The plant operates 8,000 hr/yr and the shutdown (turnaround) time for maintenance is approximately 31 days. The purpose of shutdown time is to perform necessary maintenance (external and internal), repairs, and equipment replacement. According to the Seider textbook, the maintenance cost is the sum of maintenance wages and benefits (MW&B), salaries and benefits (for supervisors), materials and services, and maintenance overhead.[7-21] For solids-fluids handling process, the MW&B is 4.5% of the total depreciable cost (C_{TDC}), which has a Lang factor of 4.28 based on the delivered cost of equipment[38]. Salaries and benefits cost 25% of MW&B; materials and services cost 100% of MW&B,

and the maintenance overhead costs 5% of MW&B[38]. We obtained a total maintenance cost of $3.10M/yr.

Table 8: Breakdown of Total Annual Maintenance Cost

Maintenance Cost Calculations			
Cost Item			Cost Factor
Total Purchase Cost	6666767	$	
Delivered Equipment Cost	7000106	$	1.05
Total Depreciatable Capital	29960453	$/yr	4.28
Annual Maintenance Cost			
MW&B	1348220	$/yr	4.5%
Salaries and Benefits	337055	$/yr	25%
Materials and Services	1348220	$/yr	100%
Maintenance Overhead	67411	$/yr	5%
Total	3100907	$/yr	

4.2.5.4. Material Cost and Revenue

Based on our current material balance, our sesame production system consumes 1.26M tons of seed and 17.9K tons of hexane per year, and produces 62.0K tons of sesame oil and 57.5K tons of animal feed per year. We used the market price for seed, hexane, and animal feed, ignored any market fluctuation in the future, and obtained the annual material cost or revenue of each for the annual cash flow. This allows us to calculate a breakeven oil price and compare the price to the market price.

Table 9: Material Amount, Unit and Annual Cost or Revenue

Material Cost and Revenue				
	Amount		Price	Annual Cost
	kg/s	t/yr	$/t	$
Seed	4.37	125846	1180	-148498262
Hexane	0.62	17893	1690	-30239542
Animal Feed	1.99	57386	460	26397454
Oil	2.15	61920	2668	165221882

4.2.6. Break Even Price

To obtain an annual equivalent (A, annuity) of the capital investment (P, present worth), we assumed an interest rate (i) of 15% and a study period (n) of 20 years, as those are typical values studied in course design projects and engineering economy cases. Then, the (A/P, i%, n) factor is 0.1598.[7-20] Therefore, the annuity value of the total capital investment is $5.63M.

Then, the team listed the items in the annual cash flow, set up Excel solver, and calculated an oil price which yields an annual cash flow of $0. This breakeven price is $2670/t. The current market price is $2,870/t. Since the breakeven price is $200 lower than the market price, the sesame oil production plant is profitable.

Table 10: Break Even Price Calculations

Cash Flow and Break Even		
i	15%	
n	20	yr
F/A, i, n	0.1598	
Annual Cash Flow		
Capital Cost	-5625286	$
Maintenance Cost	-3100907	$
Labor Cost	-3648051	$
Utility Cost	-507287	$
Material Cost/Revenue	12881532	$
Sum	0	$
Target	0	$
(L-R)^2	0.000E+00	--> 0

5. Conclusions

Our plant produces 62,000 metric tons of sesame oil per year (8000 hr) via mechanical pressing and solvent extraction using hexane. The plant will be operated at atmospheric pressure and at a temperature range of room (25 ^{0}C) and 90 ^{0}C.

Our team estimated a total capital investment of $35.23M. We evaluated various operating costs: labor, utility, maintenance, and material. With a 15% rate of return and 20 year study period, the breakeven price for our sesame oil is $2670/t, which is 6.9% lower than the current market price ($2870/t). Hence, we conclude that production plant under is feasible.

6. Acknowledgement

The Golden Oil team (20) expresses its gratitude for Professor Jeremy VanAntwerp (faculty advisor), who guided the team to consider various factors to progress into the project, Team 18, who shared with us information regarding some common equipment and also planned a plant visit, and Zeeland Farm Services (ZFS), whose patient and friendly staff guided us on an enlightening plant tour.

Bibliography

1. Kibbie, et al. “South Sudan Sesame Seed Oil Project: Calvin College Senior Design Proposal”. Provided by Professor Jeremy VanAntwerp, Calvin College Engineering, 2017.
2. Chelangat, Salome. “World's Leading Producers of Sesame Oil.” WorldAtlas, *worldatlas.com*. Updated 25 Aug 2017. Accessed 11 Dec 2017.
3. National Nutrient Database, *ars.usda.gov*. “Seeds, Sesame Seeds, Whole, Dried”. United States Department of Agriculture, Agricultural Research Service. Accessed 11 Dec 2017.
4. National Nutrient Database, *ars.usda.gov*. “Oil, Sesame, Salad or Cooking”. United States Department of Agriculture, Agricultural Research Service. Accessed 11 Dec 2017.
5. Bukya, Anil, and Vjayjumar. “Properties of industrial fractions of sesame seed”. *International Journal of Agriculture and Food Science*, 2013, pp. 86–89.
6. SF Gate, *sfgate.com*. “Properties of Sesame Oil.” Accessed 11 Dec 2017.
7. M. B. Covington. “Omega-3 Fatty Acids”. University of Maryland, School of Medicine, Baltimore, Maryland. *American Family Physician*, 2004, 70(1):133-140.
8. Linus Pauling Institute, *lpi.oregonstate.edu*. “Phytosterols.” Oregon State University. Updated 22 Mar 2017. Accessed 11 Dec 2017.
9. Youssef, M., Kamal E., et al. “Physicochemical Characteristics, Nutrient Content and Fatty Acid Composition of *Nigella sativa* Oil and Sesame Oil”. *Food and Public Health*, 2013, 3(6): 309-314
10. KMEC Engineering, *kmecomp.com*.“Oil pressing”. Accessed 11 Dec, 2017.
11. Large Scale Oil Expeller- Large Scale Oil Expeller Manufacturers, Suppliers and Exporters. Alibaba.com. Web. Dec 11th, 2017
12. Expeller Pressed Method for Vegetable Oil. KmeComp. Web. Dec 11th, 2017
13. Parkeh, H V. “Solvent Extraction of Vegetable oils.” *Bhavanger Chemical Works*, 1958, doi:10.1107/s0108768104030617/bs50122f1sup9.hkl.
14. Zeeland Farm Services, Inc’s History. ZFSinc. Web December 9th, 2017
15. Tir, R., Dutta, P. C. and Badjah-Hadj-Ahmed, A. Y. “Effect of the extraction solvent polarity on the sesame seeds oil composition”. *Eur. J. Lipid Sci. Technol.* 2012, 114:1427–1438
15. NIST Webbook, *webbook.nist.gov*. “2-propanol”. National Institute of Standards and Technology. Accessed 11 Nov 2017
16. NIST Webbook, *webbook.nist.gov*. “hexane”. National Institute of Standards and Technology. Accessed 11 Nov 2017
17. Chemicals A-Z.” *ICIS*. Accessed 9th Dec 2017.
18. Hexane. EPA United States Environmental Protection Agency. Web. 11th, 2017
19. Berkeley Wellness, *berkeleywellness.com*. “Hexane in Soy Food”. University of California, Berkeley. Accessed 15 Oct 2017
20. CFR - Code of Federal Regulations Title 21.” *Accessdata.fda.gov*, Accessed 9 Dec 2017. Code of Federal Regulations, Title 21 Chapter I, Sec. 173.270 Hexane
21. “Breaking News.” *Hexane - Toxipedia*, www.toxipedia.org/display/toxipedia/Hexane#Hexane-OSHA. Accessed 9 Dec 2
22. Seader, et. al. Separation Process Principles: Chemical and Biochemical Operations, 3rd Ed. “Section 4.7: Solid-Liquid Systems”. John Wiley & Sons, Inc., 2011.
23. Top-Notch Technology in Production of Oil and Fats. ChemPro. Web, December 9th, 2017
24. FAO Corporate Statistical Database, *fao.org/faostat/*. “Sesame Seed”. Food and Agriculture Organization of the United Nations. Accessed 11 Dec 2017

25. *World: Sesame Oil- Market Report, Analysis, and Forecast to 2025. Indexbox Marketing & Consulting.* Web Dec 11th 2017
26. Sengar. *Sesame Oil Market Value Chain and Forecast 2017-2022*. Findmarketresearch. September 12th, 2017. Web. December 7th, 2017
27. Exporting Sesame Oil to Europe. Centre for the Promotion of Imports-Ministry of Foreign Affairs. Web. December 7th, 2017
28. Global Sesame Seeds Market- Growth, Trends and Forecast 2017-2022. Mordorintelligence. Web. December 7th, 2017
29. *alibaba.com*. Entry "sesame seed". Accessed 10 Nov 2017.
30. *alibaba.com*. Entry "n-hexane". Accessed 10 Nov 2017.
31. *alibaba.com*. Entry "sesame oil". Accessed 10 Nov 2017.
32. *alibaba.com*. Entry "sesame oil cake animal feed". Accessed 10 Nov 2017.
33. *msn.com*. "Currency Converter", USD - EUR. Accessed 11 Nov 2017.
34. Seider, et. al. *Product and Process Design Principles: Synthesis, Analysis, and Evaluation*, 3rd Ed. "Section 22.6: Purchase Costs of Other Chemical Processing Equipment". John Wiley & Sons, Inc., 2009.
35. Langham, et. al. *Sesame Harvest Guide*. Sesaco Sesame Coordinators, 2008.
36. *aqua-calc.com*. Entry "Seeds, sesame seeds, whole, dried, density". Accessed 4 Nov 2017.
37. Feeco International, *feeco.com*. Rotary Dryer Brochure: "Drying and Cooling Solutions". Accessed 9 Dec 2017.
38 GEA Processing Engineering, *gea.com*. "Rotary Dryers, Coolers, and Calciners". Accessed 9 Dec 2017.
39. Seider, et. al. *Product and Process Design Principles: Synthesis, Analysis, and Evaluation*, 3rd Ed. "Section 22.5: Purchase Costs of the Most Widely used Process Equipment". John Wiley & Sons, Inc., 2009.
40. The Physics Factbook, *hypertextbook.com*. "Density of Steel". Accessed 4 Nov 2017.
41. Spectrum Ingredients, *spectrumingredients.com*. "Understanding Oil Extraction Methods: Expeller pressed vs solvent extracted oils". Accessed 11 Nov 2017.
42. NIST Webbook, *webbook.nist.gov*. "water". National Institute of Standards and Technology. Accessed 11 Nov 2017.
43. Seider, et. al. *Product and Process Design Principles: Synthesis, Analysis, and Evaluation*, 3rd Ed. "Section 22.4: Estimation of the Total Capital Investment". John Wiley & Sons, Inc., 2009.
44. Seider, et. al. *Product and Process Design Principles: Synthesis, Analysis, and Evaluation*, 3rd Ed. "Section 22.2: Cost Indexes and Capital Investment". John Wiley & Sons, Inc., 2009.
45. Seider, et. al. *Product and Process Design Principles: Synthesis, Analysis, and Evaluation*, 3rd Ed. "Section 23.2: Annual Sales Revenues, Production Costs, and the Cost Sheet". John Wiley & Sons, Inc., 2009.
46. Sullivan, et. al. *Engineering Economy*, 16th Ed. "Appendix C: Interest and Annuity Tables for Discrete Compounding". Pearson Higher Education, Inc., 2015.
47. Michigan's Largest Soybean Processing Plant. ZFSinc. Web December 9th, 20178.
48. Search Salaries and Compensation. Glassdoor. Web. December 11th, 2017

Appendices

Table A.1: Salary of various professions in the US

Average salary in the US		
Total hours each worker work	1794	hr/yr
Average operator's salary	35	$/hr
Average truck driver's salary	19.2	$/hr
Average office workers's salary	20	$/hr
Average salemen's salary	15.07	$/hr